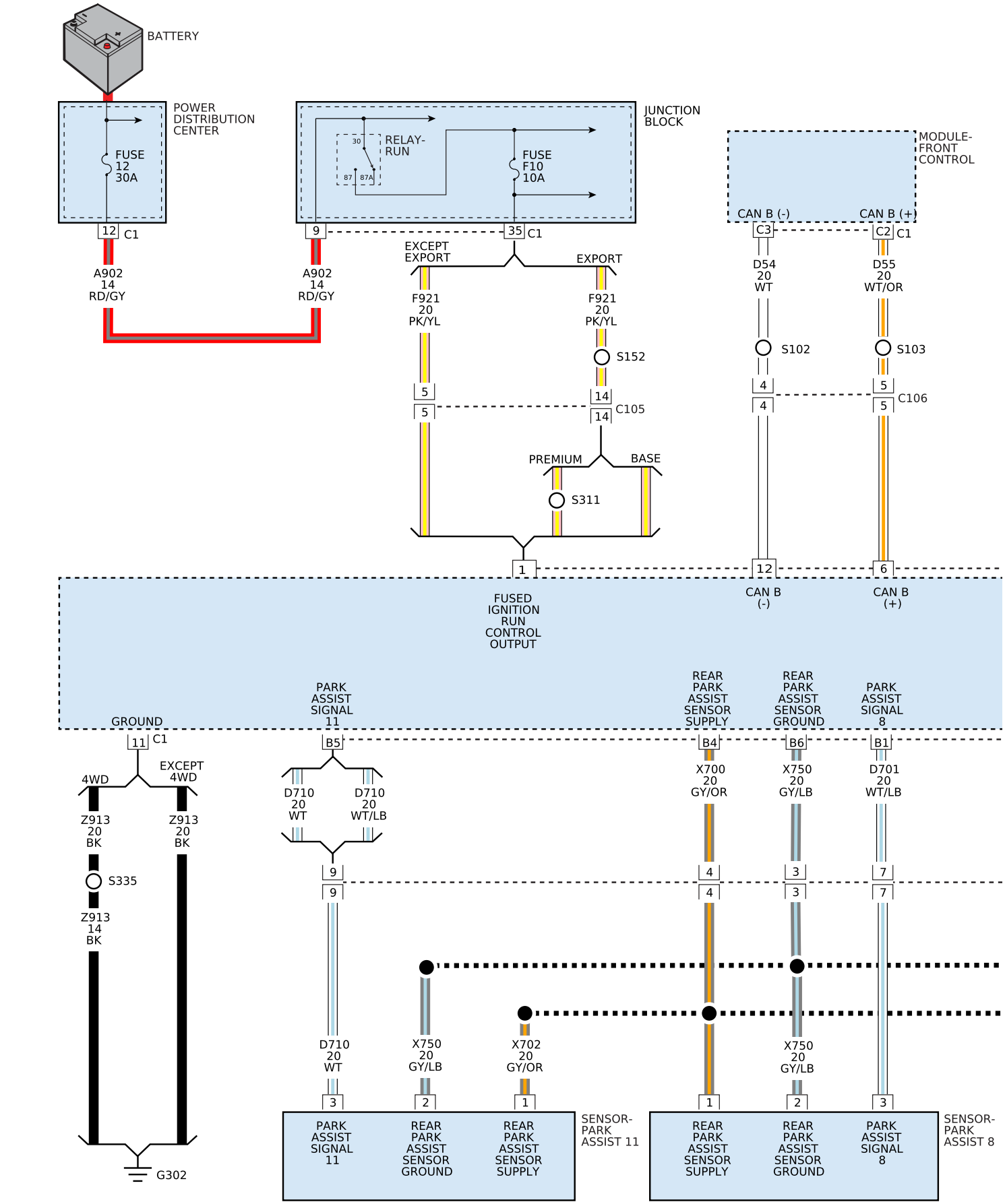PARK ASSIST SYSTEM